BORLA PERFORMANCE INDUSTRIES
5901 Edison Dr.
Oxnard, Ca. 93033

2006 Chevrolet Corvette Z06
Exhaust System Installation

Precision manufactured using aircraft quality T-304 stainless steel; this system is designed to endure years of heavy use. Installing a Borla Performance Exhaust System on your vehicle will eliminate the restrictive design of the stock exhaust, allowing your engine to discharge exhaust gas easier. The result is more horsepower and torque, longer engine life, and a distinctive throaty growl- all this, with easy bolt-on installation. These installation instructions have been written to help you in the installation of your Borla Performance Exhaust System. Please read it completely before installing your system.

Thank you for purchasing a Borla Performance Cat-Back™ Exhaust System.

These Borla Performance Cat-Back™ Exhaust Systems (Part numbers 140191 & 140192) have been designed for the 2006 Chevrolet Corvette Z06 equipped with a 7.0L V-8 engine and manual transmissions.

Borla Performance Industries recommends that an exhaust shop or professional after market parts installer, who has all the necessary equipment, tools and experienced personnel needed for proper installation, should perform the installation of this system. However, if you decide to perform the installation, we recommend someone should help you. Ensure the installer uses all under car safety precautions including eye protection.

Please take time to read and understand the following…

By installing your Borla Performance Exhaust System, you indicate that you have read this document and you agree with the terms stated below.

It is the responsibility of the purchaser to follow all installation instruction guidelines and safety procedures supplied with your Borla Performance Exhaust System

Borla Performance Industries assumes no responsibility for damages occurring from misuse, abuse, improper installation, improper operation, lack of responsible care, or all previously stated reasons resulting from incompatibility with other manufacturer's products and/or systems.

Included with your Borla Performance Exhaust System is a warranty card. Please read it carefully before you begin any work on your vehicle. If you should have any questions regarding our warranty policy, installation, or any other matter pertaining to your new Borla Performance Exhaust System, please give us a call at the number provided on the warranty card.

Minimum Required Tool List:

TOOLS:

1 3/8” Drive Ratchet
2 3/8” Drive Extension 3”
3 13mm Socket
4 15mm Socket
5 Pry Bar

SHOP SUPPLIES:

1 Spray Lubricant

Borla Performance Cat-Back™ Bill of Materials Part Number 140191

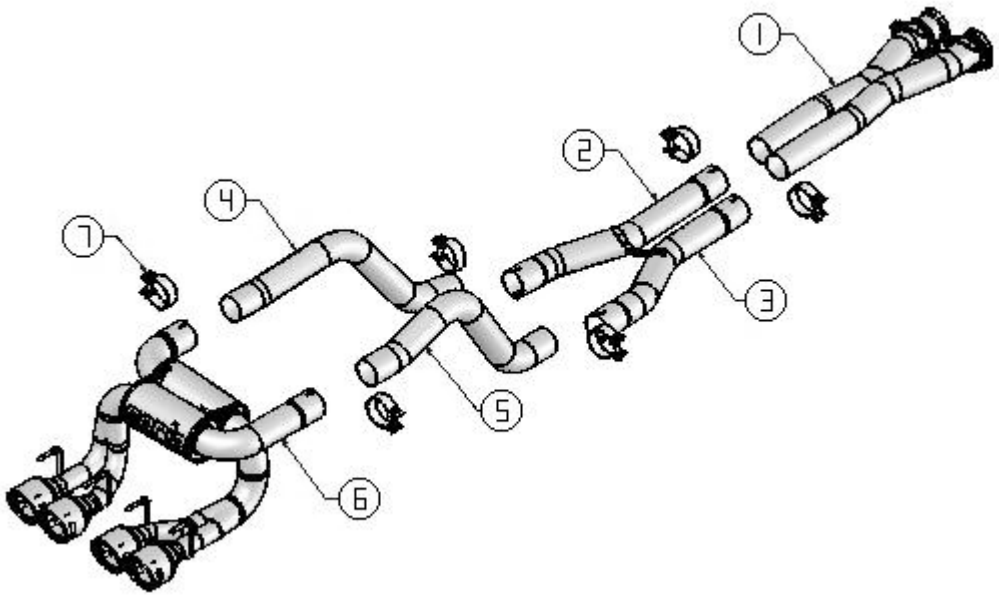

1. X pipe assembly
2. Left extension pipe assembly
3. Right extension pipe assembly
4. Left over axle pipe
5. Right over axle pipe
6. Muffler assembly
7. 3.00” clamp (qty 6)
8. Vacuum plug (qty 2 not shown)

Minimum Required Tool List:

TOOLS:

1 3/8” Drive Ratchet
2 3/8” Drive Extension 3”
3 13mm Socket
4 15mm Socket
5 Pry Bar

SHOP SUPPLIES:

1 Spray Lubricant

Borla Performance Cat-Back™ Bill of Materials Part Number 140192

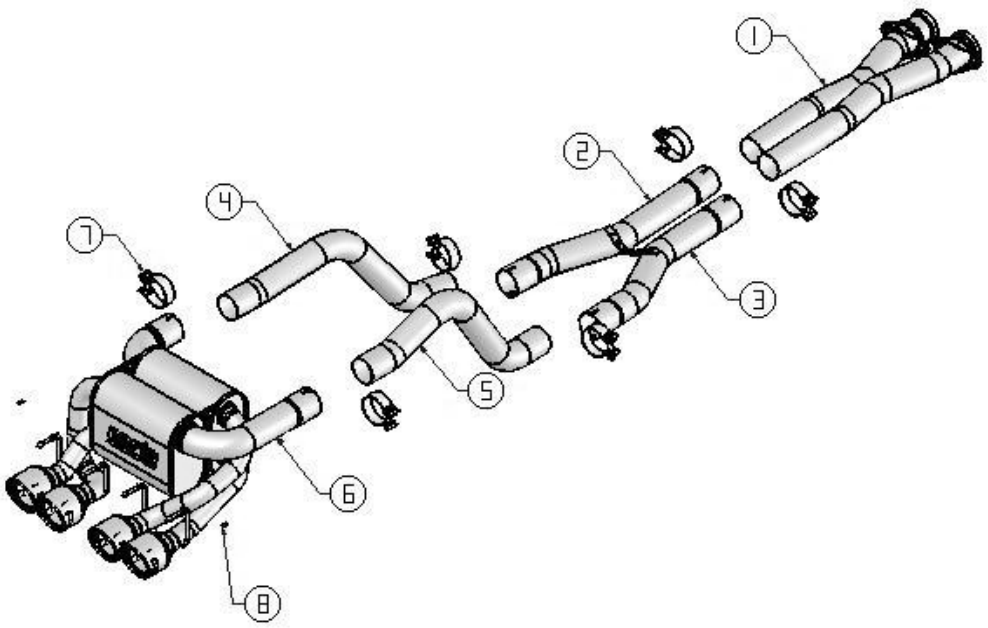

1. X pipe assembly
2. Left extension pipe assembly
3. Right extension pipe assembly
4. Left over axle pipe
5. Right over axle pipe
6. Muffler assembly
7. 3.00” clamp (qty 6)
8. Vacuum plug (qty 2 not shown)

Caution!!! Never work on a hot exhaust system. Serious injury in the form of burns can result If the vehicle has been in use and the exhaust system is hot, allow vehicle to cool for at least 1 hour. Always wear eye protection when working under any vehicle.

Note: It is our recommendation that you use a hoist or hydraulic lift to facilitate the installation of your new Borla Performance Cat-Back™ Exhaust System.

Taking all under car safety precautions, lift the vehicle using a hoist or hydraulic lift. Once this has been done, you may begin the removal of your old exhaust system from your vehicle.

Note: Before removing the original exhaust system from your vehicle, please compare the parts you have received with the bill of materials provided on the previous page to assure that you have all the parts necessary for the installation of your new Borla Performance Cat-Back™ Exhaust System.

Original Exhaust System Removal

Note: With a used vehicle, we suggest a penetrating spray lubricant to be applied liberally to all exhaust fasteners and allowing a significant period of time for the chemical to lubricate the threads before attempting to disassemble.

1. Loosen the clamps shown in figure 1 located just under the transmission at the rear of the vehicle.

2. Using a 13mm socket, unbolt the spring hangers located just in front of the clamps as shown in figure 2. Place the bolts aside for use during the installation of your new exhaust system.

3. With a muffler stand or an additional person to hold the h-pipe assembly up into position, using a 15mm socket, unbolt the flanges shown in figure 3 located just behind the catalytic converters. Place the hardware and gaskets to the side for use during the installation of your new exhaust system.

4. Remove the h-pipe assembly from the vehicle by dropping the front down as shown in figure 4, than sliding the rear portion out of the factory over axle pipe/muffler assemblies.

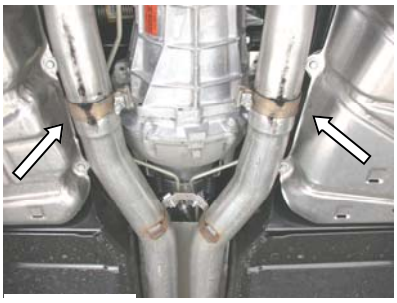

Figure 1

Figure 2

Figure 3

Figure 4

Original Exhaust System Removal (continued)

5. Unbolt the rear anti sway bar and swing it down and out of the way as shown in figure 5.

6. Remove the vacuum hose from each valve located on each muffler at the rear of the vehicle just above the tips as shown in figure 6.

7. Lubricate all hangers and rubber isolators.

8. Before removing the muffler assemblies, because of the tight clearances on this vehicle, it may be required to unplug and move some of the electrical connectors shown in figure 7 located at the rear of the vehicle above the over axle pipes.

9. Beginning with the passenger side muffler assembly; using a muffler stand or an additional person to hold the muffler assembly up into place, remove the hangers from the rubber isolators and carefully remove the muffler assembly from the vehicle as shown in figure 8.

10. Repeat step 9 for the removal of the driver side muffler assembly.

Warning: Use extreme caution during installation. Torque all fasteners according to manufacturer's torque values and tightening sequence. <u>DO NOT</u> use air impact tools to tighten fasteners on Borla Performance Exhaust Systems. Use of such tools may result in bent flanges or gasket contact areas leading to exhaust leaks.

Borla Performance Exhaust System Installation

1. Using the original hardware and gaskets, install the X pipe assembly into position as shown in figure 9. Hand tighten the hardware for now.

2. Place a clamp over the expanded end of both left and right extension pipes and place them into position as shown in figure 10. <u>Do Not</u> tighten clamps.

Figure 5

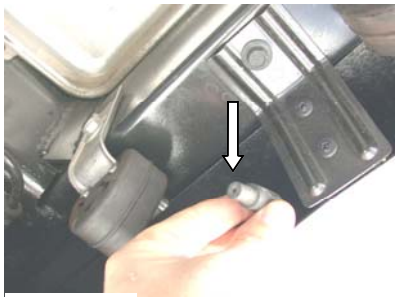

Figure 6

Figure 7

Figure 8

Figure 9

BORLA PERFORMANCE INDUSTRIES
5901 Edison Dr.
Oxnard, Ca. 93033

Borla Performance Cat-Back™ Exhaust System Installation (continued)

3. Using the original hardware, attach the spring hangers to the extension pipes as shown in figure 11.

4. Place a clamp over the expanded ends of both left and right extension pipes and install the over axle pipes as shown in figure 12. Do Not tighten clamps.

5. Place a clamp over the expanded ends of both left and right over axle pipe making sure the hardware is facing downward as shown in figure 13. Do Not tighten clamps.

6. Carefully place the muffler assembly into position as shown in figure 14 making sure to install the hangers into the rubber isolators. Do Not tighten clamps.

7. Check your exhaust system for proper clearance under the vehicle and also for tip alignment.

8. Once position has been determined to be correct, tighten the Accuseal clamps to 32-35 ft. lbs. and the front flanges to 35-40 ft. lbs.

9. Using the original hardware, reinstall the sway bar. Torque the upper bolts to 45-49 ft. lbs. And the lower nuts to 65-70 ft. lbs.

10. If any connectors or wires had to be moved to allow for clearance during the removal or installation of your exhaust, reconnect them and install them into their original positions.

11. Insert the vacuum plugs included with your system into the vacuum hoses at the rear of vehicle.

12. Before starting your vehicle, make sure to check all wires, hoses, brake lines, body parts and tires for safe clearance from the exhaust system.

13. Start vehicle and check for any leaks. If any leaks are found, determine cause (such as loose or incorrectly positioned clamp) and repair as necessary.

Note: When you first start your vehicle after the installation of your new Borla Performance Exhaust System, there may be some smoke and fumes coming from the system. This is a protective oil based coating used in the manufacturing of mandrel bent performance exhaust tubing. This is not a problem and will disappear within a very short period of time after the exhaust has reached normal operating temperatures.

Figure 10

Figure 11

Figure 12

Figure 13

Figure 14